CONTACT THAILAND DISTRIBUTOR - TECHSQUARE CO., LTD.
TEL +666-5559-6050 EMAIL sales@techsquare.co.th SITE www.techsquare.co.th

PXI Precision Programmable Resistor Module 40-261

- Precision Variable Resistance From 1.5 Ω
- 2 Channels Per Module
- Fine Setting Resolution <2 mΩ or 15 mΩ
- Short and Open Circuit Simulation
- Low Thermo-electric EMF Errors
- Simple Calibration With External DMM
- Drivers Supplied for Windows & Linux, Plus Support for Real-time Systems
- Supported by PXI or LXI Chassis
- 3 Year Warranty



The 40-261 is a new generation of PXI programmable resistors that features high setting resolution with excellent stability and accuracy through the use of innovative switching networks and software correction techniques. Two versions are available:

- 2 channel, 1.5 Ω to 2.9 kΩ range, <2 mΩ precision
- 2 channel, 10 Ω to 36 kΩ range, <15 mΩ precision

The use of innovative technology ensures all resistance values can be set – no missing values due to switch resistance or resistor tolerance.

This makes the 40-261 ideal for simulating sensors that require accurate control and fine setting values. Applications include air bag squib, strain gauge and temperature dependent resistor emulation.

The channels are fully isolated from the chassis ground and each other, allowing use in floating systems.

The 40-261 provides a convenient system for resistance calibration using an external DMM connected to the calibration port. It allows cascading so one DMM can be used to calibrate multiple modules. Calibration can be performed while the UUT is connected to the module.

Use of special switching techniques reduces measurement errors caused by thermo-electric EMFs to a minimum.

The 40-261 occupies one 3U PXI slot and can be supplied with other resistance ranges.

For applications requiring a higher starting resistance the 40-260 offers a solution with three channels in each module.

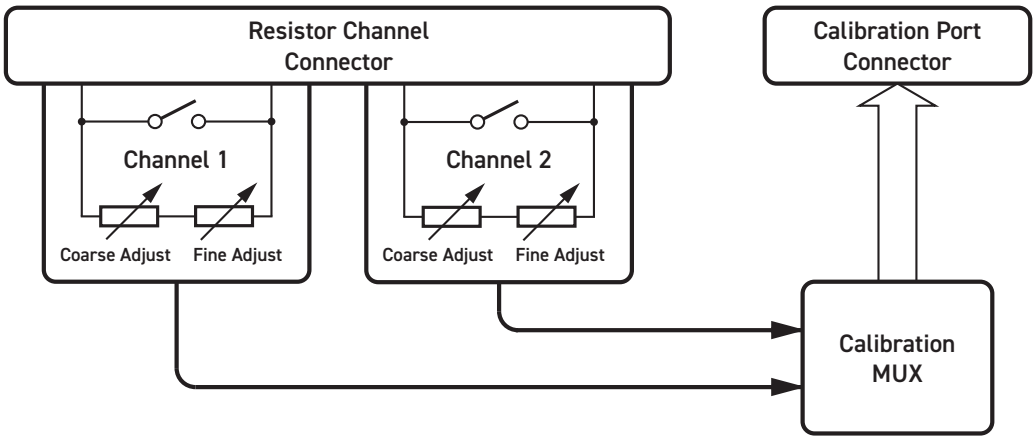

Functional Diagram for the 40-261 Precision Programmable Resistor Module

Specification

Resistor Channels	
Configuration:	2 resistor channels per module.
Resistance Range 40-261-001: 40-261-002:	 1.5 Ω to 2.9 kΩ 10 Ω to 36 kΩ
Resistance resolution:	<2 mΩ, (40-261-001) <15 mΩ, (40-261-002) continuous resolution, no missing settings.
Accuracy:	±0.08 % ±70 mΩ from 12 °C to 32 °C Typical temperature coefficient: 4 mΩ per °C (low resistance settings)
Short Circuit Setting:	<0.1 Ω initial
Open Circuit Setting:	$>10^9$ Ω
Maximum power:	100 mW
Maximum Voltage:	100 V* or as limited by power
Thermo-electric emf:	<2 µV 1.5 Ω to 18 Ω (40-261-001) 10 Ω to 220 Ω (40-261-002) <5 µV >18 Ω (40-261-001) >220 Ω (40-261-002)
Resistance - power off:	Open circuit
Number of Operations:	100 million (10 mA)
Operating time:	3 ms typical

* For full voltage rating, signal sources must be fully isolated from mains supply and safety earth.

Calibration Channel	
Function:	Supports 4 terminal measurements of all the channels in the module. Modules can be cascaded together to permit single DMM to support multiple modules with resistor channel connected to UUT.
DMM:	DMM with 10mA source current measurement capability recommended.

Software Support

Supplied with software that accepts a resistance instruction.

Power Requirements

+3.3 V	+5 V	+12 V	-12 V
0	0.2 A	0	0

The 40-261 uses innovative techniques which are the subject of protected Pickering Interfaces intellectual property rights.

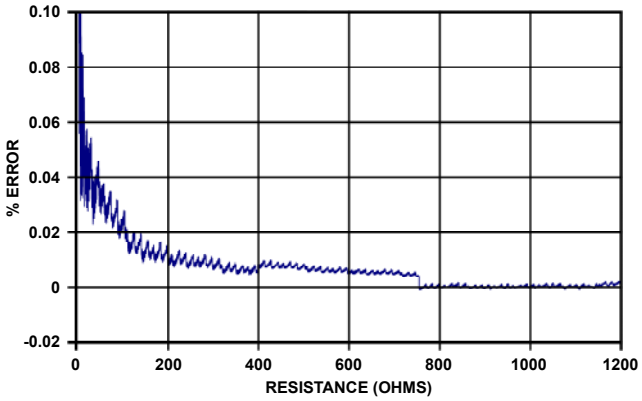

Typical accuracy of 40-261 over the entire resistance range measured at 21 °C

Performance is measured in 10 mΩ increments by making a resistance call (in Ohms) to the module and then measuring the actual resistance with a DMM. Vertical axis shows the reading error as % of the requested value.

Mechanical Characteristics

Single slot 3U PXI (CompactPCI card).
3D models for all versions in a variety of popular file formats are available on request.

Connectors

PCI Interface: 33 MHz, 32-bit address, 16 bit data.
Resistor channel signals via front panel 15-pin male D-Type connector. Calibration connection via front panel 9-pin male D-Type connector. For pin outs please refer to the operating manual.

Operating/Storage Conditions

Operating Conditions

Operating Temperature:	0 °C to +55 °C
Humidity:	Up to 90 % non-condensing
Altitude:	5000 m

Storage and Transport Conditions

Storage Temperature:	-20 °C to +75 °C
Humidity:	Up to 90 % non-condensing
Altitude:	15000 m

PXI & CompactPCI Compliance

The module is compliant with the PXI Specification 2.2. Local Bus, Trigger Bus and Star Trigger are not implemented.

Uses a 33 MHz 32-bit backplane interface.

Safety & CE Compliance

All modules are fully CE compliant and meet applicable EU directives: Low-voltage safety EN61010-1:2010, EMC Immunity EN61326-1:2013, Emissions EN55011:2009+A1:2010.

Product Order Codes

2 Channel Precision Resistor 1.5 Ω to 2.9 kΩ	40-261-001
2 Channel Precision Resistor 10 Ω to 36 kΩ	40-261-002

Accessories:

Calibration port to DMM lead (shrouded 4mm bayonet plug):

For a single module (1x9 pin D-type)	40-975-009-SL1
For two modules (2x9 pin D-types)	40-975-009-SL2
For three modules (3x9 pin D-types)	40-975-009-SL3

(calibration leads capable of supporting a greater number of modules are available, please contact sales office).

Mating Connectors & Cabling

For connection accessories for the 40-261 please refer to the 90-010D 15-pin D-Type and 90-003D 9-pin D-Type Connector Accessories data sheets where a complete list and documentation can be found for accessories, or refer to the website.

Other Resistor Modules

Pickering Interfaces manufacture a range of variable resistor modules in the PXI format. If you have a requirement for a variable resistor module please contact your local sales office with the information below and we will advise you on the best solution for your application.

Lowest Resistance †	
Highest Resistance	
Resistance Resolution	
Overall Accuracy	
Maximum Power/Current	
Number of Channels (variable resistors)	

† Resistance is as measured across the user connector terminals, minimum resistance must have a non-zero value.

Product Customization

Pickering PXI modules are designed and manufactured on our own flexible manufacturing lines, giving complete product control and enabling simple customization to meet very specific requirements.

Customization can include:

- Alternative resistance range
- Alternative resolution
- Different number of channels
- Different performance specifications

All customized products are given a unique part number, fully documented and may be ordered at any time in the future. Please contact your local sales office to discuss.

The 40-261 is part of a range of Precision Resistor Modules suitable for simulation applications.

For applications that do not require the precision or accuracy of our precision range, look to our PXI Standard Resistor range which includes models 40-280, 40-281, 40-282, 40-290, 40-291, 40-292, 40-293, 40-294, 40-295 and 40-296.

Pickering's Range of Precision Resistor Modules				
Resistor Type	Channels	Range	Resolution	Model No.
Precision	3	90 Ω to 8 kΩ	<10 mΩ	40-260
Precision	2	1.5 Ω to 2.9 kΩ or 10 Ω to 36 kΩ	<2 mΩ or <15 mΩ	40-261
RTD Simulator	18, 12 or 6	90 Ω to 250 Ω or 900 Ω to 2500 Ω	<8 mΩ or <90 mΩ	40-262
RTD Simulator	24, 20, 16, 12, 8 or 4	40 Ω to 900 Ω, 200 Ω to 4.5 kΩ or 400 Ω to 9 kΩ	<10 mΩ, <50 mΩ or <100 mΩ	40-263
Strain Gauge Simulator	6, 4 or 2	350 Ω, 1 kΩ, 1.5 kΩ, 2 kΩ or 3 kΩ	<2 mΩ, <10 mΩ, <12.5 mΩ, <20 mΩ or <25 mΩ	40-265
High Density Precision	18, 9, 6, 4 or 3	Up to 85.3 MΩ	0.125 Ω, 0.25 Ω, 0.5 Ω, 1 Ω, 2 Ω, 4 Ω or 8 Ω	40/42-297A
High Density Precision	18, 9, 6, 4 or 3	Up to 22.3 MΩ	0.125 Ω, 0.25 Ω, 0.5 Ω, 1 Ω or 2 Ω	40-298

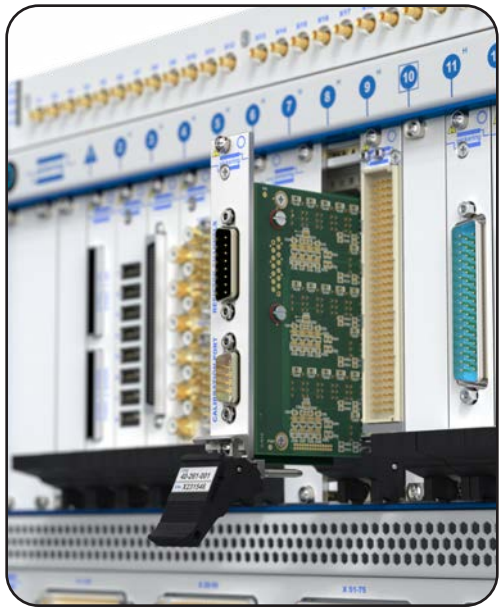



Chassis Compatibility

This PXI module must be used in a suitable chassis. It is compatible with the following chassis types:

- All chassis conforming to the 3U PXI and 3U Compact PCI (cPCI) specification
- Legacy and Hybrid Peripheral slots in a 3U PXI Express (PXIe) chassis
- Pickering Interfaces LXI or LXI/USB Modular Chassis

Chassis Selection Guide

Standard PXI or hybrid PXIe Chassis From Any Vendor:

- Mix our 1000+ PXI switching & simulation modules with any vendor's PXI instrumentation
- Embedded or remote Windows PC control
- Real-time Operating System Support
- High data bandwidths, especially with PXI Express
- Integrated module timing and synchronization



Pickering LXI or LXI/USB Modular Chassis
Only accept our PXI Switching & Simulation Modules:

- Choose from 1000+ Pickering PXI Modules
- Ethernet or USB control enables remote operation
- Low-cost control from practically any controller
- LXI provides manual control via Web browsers
- Driverless software support
- Power sequencing immunity
- Ethernet provides chassis/controller voltage isolation
- Independence from Windows operating system



Connectivity Solutions

We provide a full range of supporting cable and connector solutions for all our switching products—20 connector families with **1200+** products. We offer everything from simple mating connectors to complex cables assemblies and terminal blocks. All assemblies are manufactured by Pickering and are guaranteed to mechanically and electrically mate to our modules. These accessories are detailed in Connector Accessories data sheets, where a complete list and documentation can be found for each accessory.





Connectors & Backshells



Multi-way Cable Assemblies



RF Cable Assemblies



Breakouts



Connector Blocks

We also offer customized cabling and have a free online **Cable Design Tool** that can be used to create custom cable solutions for many applications.

- Fully supported on modern browsers and tablet operating systems.
- Built-in tutorials and videos allow you to get quickly up to speed.
- Store cable assemblies in the Cloud and develop over time.
- Each cable design has a downloadable PDF documentation file detailing all specifications

Start designing your custom cabling, go to pickeringtest.com/cdt

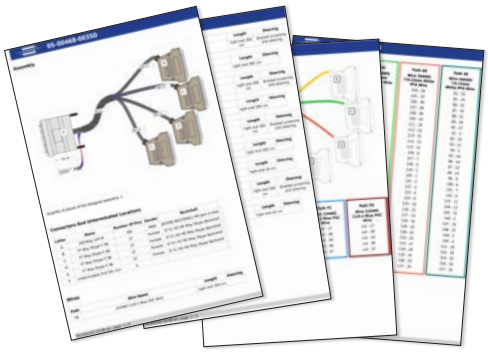

Mass Interconnect

We recommend the use of a mass interconnect solution when an Interchangeable Test Adapter (ITA) is required for PXI/LXI based test systems. Our modules are fully supported by Virginia Panel and MacPanel.

Pickering Reed Relays

We are the only switch provider with in-house reed relay manufacturing capability via our Relay Division. These instrument grade reed relays feature ***SoftCenter***™ technology, ensuring long service life and repeatable contact performance.

To learn more go to pickeringrelay.com

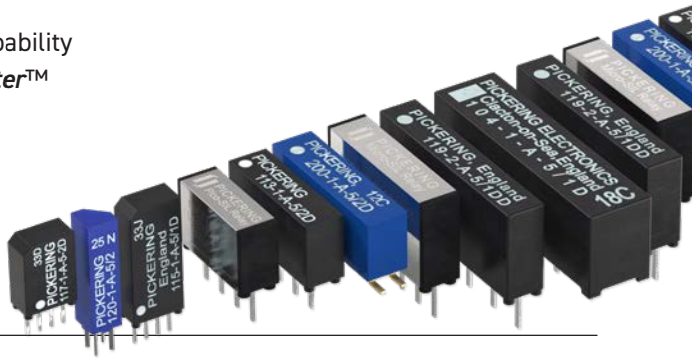

Programming

Pickering provide kernel, IVI and VISA (NI & Keysight) drivers which are compatible with all Microsoft supported versions of Windows and popular older versions.

For more information go to pickeringtest.com/os

The VISA driver support is provided for LabVIEW Real Time Operating Systems (Pharlap and Linux-RT). For other RTOS support contact Pickering. These drivers may be used with a variety of programming environments and applications including:

- **Pickering Interfaces Switch Path Manager**
- **National Instruments** products (LabVIEW, LabWindows/CVI, Switch Executive, MAX, TestStand, VeriStand, etc.)
- **Microsoft Visual Studio** products (Visual Basic, Visual C++)
- **Programming Languages** C, C++, C#, Python
- **Keysight** VEE and OpenTAP
- **Mathworks MATLAB, Simulink**
- **Marvin** ATEasy
- **MTQ Testsolutions** Tecap Test & Measurement Suite

Drivers for popular Linux distributions are available, other environments are also supported, please contact Pickering with specific enquiries. We provide Soft Front Panels (SFPs) for our products for familiarity and manual control, as well as comprehensive documentation and example programs to help you develop test routines with ease.

To learn more about software drivers and development environments go to pickeringtest.com/software

Signal Routing Software

Our signal routing software, Switch Path Manager, automatically selects and energizes switch paths through Pickering switching systems. Signal routing is performed by simply defining test system endpoints to be connected together, greatly accelerating Test System software development.

To learn more go to pickeringtest.com/spm

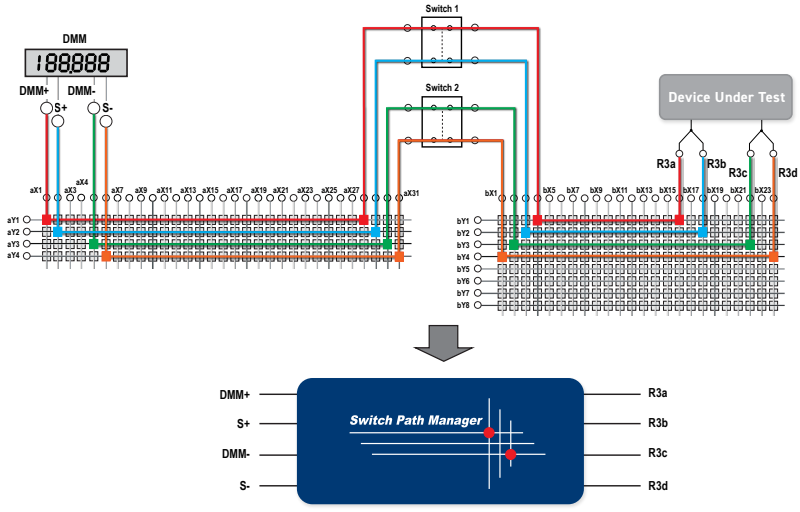

Diagnostic Relay Test Tools

eBIRST Switching System Test Tools are designed specifically for our PXI, PCI or LXI products, these tools simplify switching system fault-finding by quickly testing the system and graphically identifying the faulty relay.

To learn more go to pickeringtest.com/ebirst



Three Year Warranty & Guaranteed Long-Term Support

All standard products manufactured by Pickering Interfaces are warranted against defective materials and workmanship for three years from the date of delivery to the original purchaser. Extended warranty and service agreements are available with various levels for your requirements. Although we offer a 3-year warranty as standard, we also include guaranteed long-term support—with a history of supporting our products for typically 15-20 years.

To learn more go to pickeringtest.com/support

Available Product Resources

We have a library of resources including success stories, product and support videos, articles and white papers as well as application-specific brochures to assist you. We have also published reference books on switching technology and the PXI and LXI standards.

To view, download or request any of our product resources go to pickeringtest.com/resources



© Copyright (2025) Pickering Interfaces. All Rights Reserved
Pickering Interfaces maintains a commitment to continuous product development, consequently we reserve the right to vary from the description given in this data sheet.