CONTACT THAILAND DISTRIBUTOR - TECHSQUARE CO., LTD.
TEL +666-5559-6050 EMAIL sales@techsquare.co.th SITE www.techsquare.co.th

PXI Selectable Resistor Module 40-280/281/282

- High Density Selectable Resistor Module
- Up to 48 Separate Channels of Switchable Resistors
- Customer Defined Resistor Values
- Channels Can be Set as Open or Short Circuit or a Pre-set Resistor Value (40-280)
- Version Available With Switchable Offset Resistance (40-281)
- Potential Divider Version Available (40-282)
- Uses High Reliability Pickering Reed Relays For Maximum Performance
- Drivers Supplied for Windows & Linux, Plus Support for Real-time Systems
- Supported by PXI or LXI Chassis
- 3 Year Warranty



The 40-280 series provides a cost effective, high-density solution for applications requiring a high channel count of simple resistor configurations.

The 40-280 provides up to 48 isolated channels, each of which can be programmed as a short circuit, an open circuit or a fixed resistor value.

The 40-281 provides up to 24 isolated channels, each of which can be set as an open circuit, an offset resistor value or a fixed resistor value plus the offset.

The 40-282 is a potential divider with up 24 separate channels. This can be used to emulate potentiometer devices, each channel having a fixed R1 R2 ratio. Additionally, the centre point can be shorted to either of the potentiometer end points.

Modules are supplied without any resistors fitted, permitting the user to fit the values required. The flexibility of this allows users to select components that best meet their application needs. Alternatively, please contact the Pickering Sales Office if the module is required pre-fitted with resistors.

All versions of the 40-280 series use high quality instrument grade reed relays to ensure long service life. The modules are ideal for applications involving go/no-go testing where emulation of adjustable components or remote sensors is required. The modules provide a lower cost and higher density solution than approaches using fully programmable resistor chains.

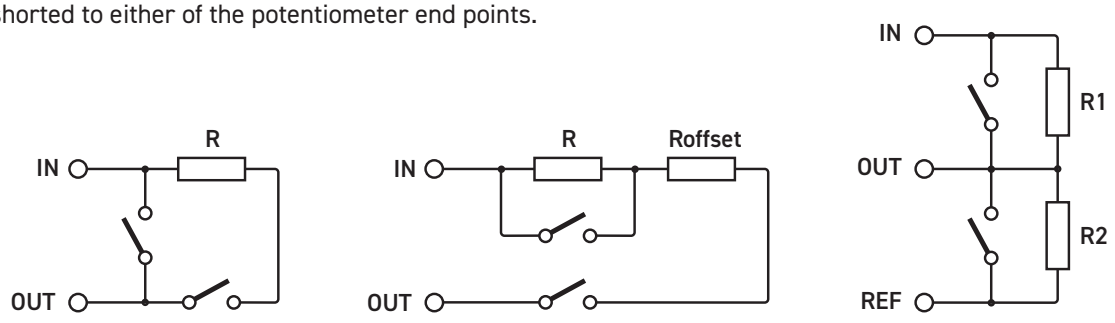

40-280 Single Resistor | 40-281 Dual Resistor | 40-282 Potential Divider

Schematic Diagrams for one channel of the 40-280/281/282 Selectable Resistor Modules

Issue 9.3 August 2025

Resistor Specification

Resistor Value:	Customer specified
Resistor Tolerance:	Customer specified
Resistor Power:	0.5 W

Switching Specification

Switch Type:	Ruthenium Reed
Max Switch Voltage:	150 VDC/100 VAC*
Max Power:	10 W
Max Switch Current:	0.5 A
Max Carry Current:	1.2 A
Initial On Path Resistance:	<1 Ω (500 mΩ nominal)
Off Path resistance:	$>10^9$ Ω
Thermal Offset:	<10 µV
Operate Time:	<0.5 ms, 0.25 ms typical
Release Time:	<0.5 ms, 0.25 ms typical
Expected Life, low power load:	$1x10^9$ operations
Expected Life, full power load:	$>1x10^6$ operations

* For full voltage rating, signal sources must be fully isolated from mains supply and safety earth.

Power Requirements

+3.3 V	+5 V	+12 V	-12 V
0	0.57 A max	0	0

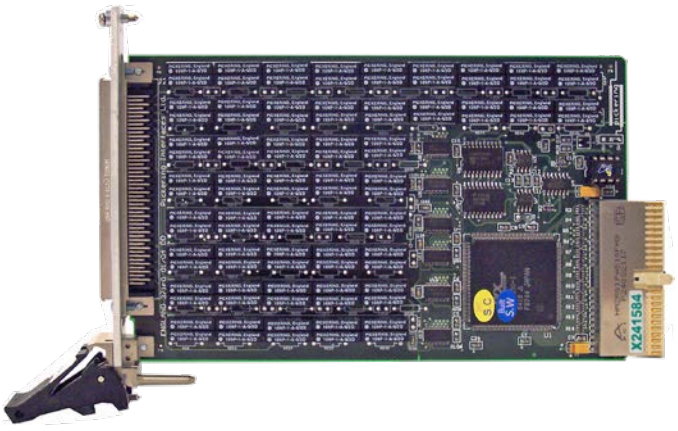

PCB Layout for the 40-280 Selectable Resistor Module

Mechanical Characteristics

1 slot 3U PXI (CompactPCI card).
3D models for all versions in a variety of popular file formats are available on request.

Connectors

PXI bus via 32-bit P1/J1 backplane connector.
Resistor channels via front panel 96-pin male micro-D connector.
For pin outs please refer to the operating manual.

Operating/Storage Conditions

Operating Temperature:	0 °C to +55 °C
Humidity:	Up to 90 % non-condensing
Altitude:	5000 m
Storage/Transport Temperature:	-20 °C to +75 °C
Humidity:	Up to 90 % non-condensing
Altitude:	15000 m

PXI & CompactPCI Compliance

The module is compliant with the PXI Specification 2.2. Local Bus, Trigger Bus and Star Trigger are not implemented.

Uses a 33 MHz 32-bit backplane interface.

Safety & CE Compliance

All modules are fully CE compliant and meet applicable EU directives:

Low-voltage safety EN61010-1:2010,
EMC Immunity EN61326-1:2013,
Emissions EN55011:2009+A1:2010.

Product Order Codes

Fixed Value Selectable Resistor Module::	
24-Channel	40-280-021
48-Channel	40-280-121
Dual Selectable Resistor Module:	
12-Channel	40-281-021
24-Channel	40-281-121
Fixed Value Potential Divider Module:	
12-Channel	40-282-021
24-Channel	40-282-121

Note: Modules are supplied without any resistors fitted. Please contact the Pickering Sales Office if you require the module to be pre-fitted with resistors.

Mating Connectors & Cabling

For connection accessories for the 40-280 series please refer to the 90-016D 96-pin D-Type Connector Accessories data sheets where a complete list and documentation can be found for accessories, or refer to the website

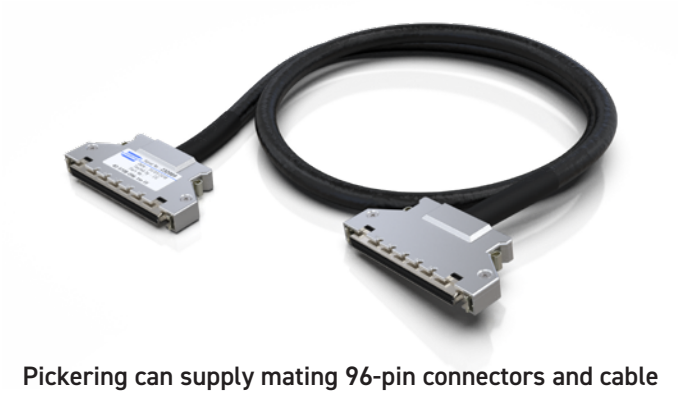

Pickering can supply mating 96-pin connectors and cable assemblies to enable easy integration of the 40-280 series of resistor modules

Other Resistor Modules

Pickering Interfaces manufacture a range of variable resistor modules in the PXI format. If you have a requirement for a variable resistor module please contact your local sales office with the information below and we will advise you on the best solution for your application.

Lowest Resistance †	
Highest Resistance	
Resistance Resolution	
Overall Accuracy	
Maximum Power/Current	
Number of Channels (variable resistors)	

† Resistance is as measured across the user connector terminals, minimum resistance must have a non-zero value.

Product Customization

Pickering PXI modules are designed and manufactured on our own flexible manufacturing lines, giving complete product control and enabling simple customization to meet very specific requirements.

Customization can include:

- Alternative resistance range
- Alternative resolution
- Different number of channels
- Different performance specifications

All customized products are given a unique part number, fully documented and may be ordered at any time in the future. Please contact your local sales office to discuss.

The 40-280/281/282 is part of a range of Programmable Resistor Modules suitable for simulation applications.

For applications requiring greater resolution (to <2 mΩ) or better accuracy (to <0.03 %), look to our Precision Resistor range which includes models 40-260, 40-261, 40-262, 40-265, and 40/42-297A

Pickering's Range of PXI/PXIe Programmable Resistor Modules			
Resistor Type	Channels	Range	Model No.
High Voltage Programmable (up to 1.2 kV)	1, 2 or 4	Up to 76.8 MΩ	40/42-230
2.5 W Programmable	1, 2, 4 or 8	Up to 22.3 MΩ	40-251
5 W Programmable	1, 2, or 4	Up to 22.3 MΩ	40-252
10 W Programmable	1 or 2	Up to 102 kΩ	40-253
15 W Programmable	1 or 2	Up to 395 kΩ	40/42-254
Fixed Value Selectable	24 or 48	User specified	40-280
Dual Selectable	12 or 24	User specified	40-281
Fixed Potential Divider	12 or 24	User specified	40-282
Programmable with Relay Option	2	0.5 Ω to 32 kΩ	40-290
Programmable with Relay Option	4	0.5 Ω to 128 Ω	40-291
15W Programmable Load	1	40 Ω to 295 Ω, 10 Ω to 2.56 kΩ	40-292
Programmable with EMR Relays	2 or 4	Up to 131 kΩ	40-293
Programmable with Reed Relays	2 or 4	Up to 131 kΩ	40-294
High Density Programmable	3, 5, 6, 10 or 18	Up to 16 MΩ	40-295
Programmable Potentiometer	1, 2, 3, 4, 5 or 9	Up to 16 MΩ	40-296

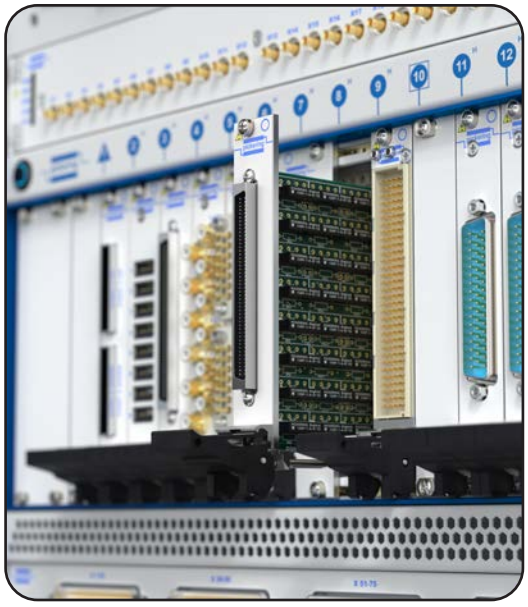

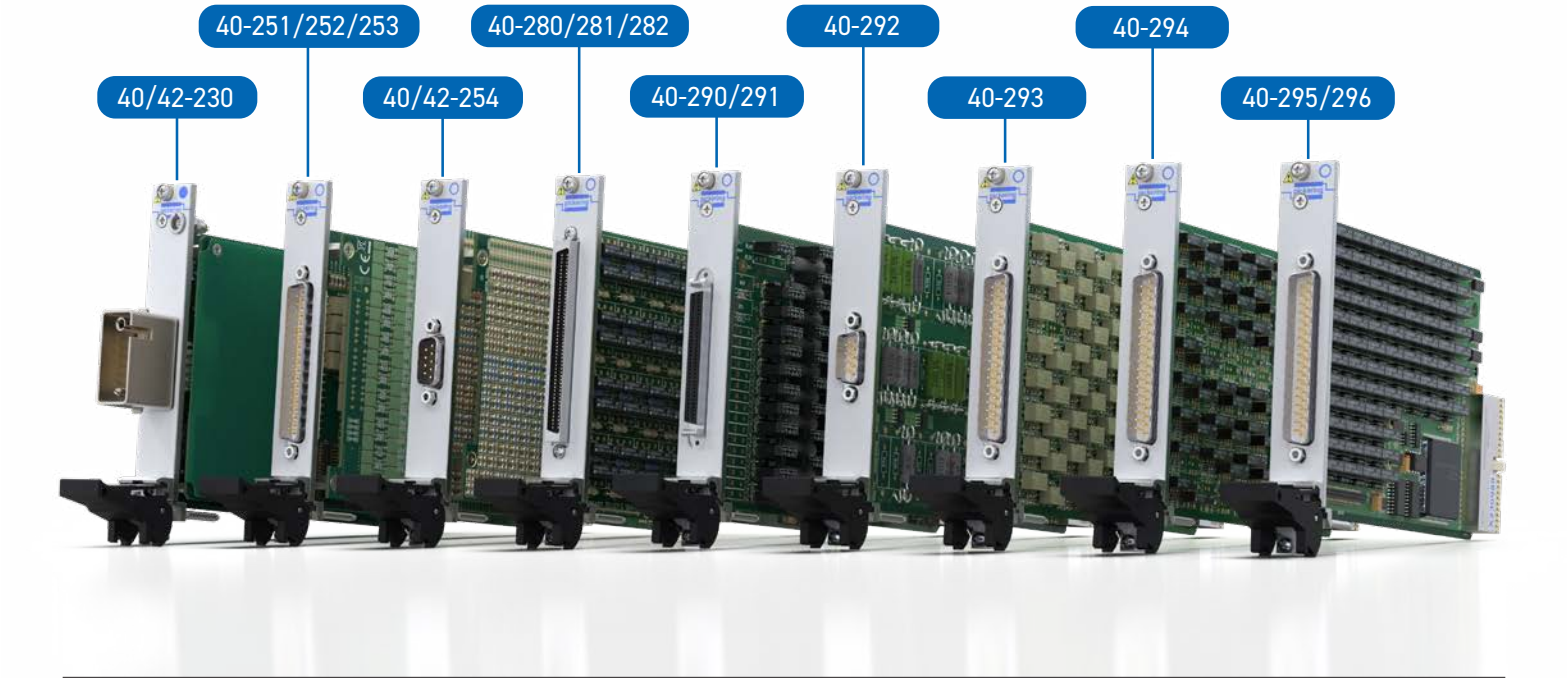

Chassis Compatibility

This PXI module must be used in a suitable chassis. It is compatible with the following chassis types:

- All chassis conforming to the 3U PXI and 3U Compact PCI (cPCI) specification
- Legacy and Hybrid Peripheral slots in a 3U PXI Express (PXIe) chassis
- Pickering Interfaces LXI or LXI/USB Modular Chassis

Chassis Selection Guide

Standard PXI or hybrid PXIe Chassis From Any Vendor:

- Mix our 1000+ PXI switching & simulation modules with any vendor's PXI instrumentation
- Embedded or remote Windows PC control
- Real-time Operating System Support
- High data bandwidths, especially with PXI Express
- Integrated module timing and synchronization



Pickering LXI or LXI/USB Modular Chassis
Only accept our PXI Switching & Simulation Modules:

- Choose from 1000+ Pickering PXI Modules
- Ethernet or USB control enables remote operation
- Low-cost control from practically any controller
- LXI provides manual control via Web browsers
- Driverless software support
- Power sequencing immunity
- Ethernet provides chassis/controller voltage isolation
- Independence from Windows operating system



Connectivity Solutions

We provide a full range of supporting cable and connector solutions for all our switching products—20 connector families with **1200+** products. We offer everything from simple mating connectors to complex cables assemblies and terminal blocks. All assemblies are manufactured by Pickering and are guaranteed to mechanically and electrically mate to our modules. These accessories are detailed in Connector Accessories data sheets, where a complete list and documentation can be found for each accessory.





Connectors & Backshells



Multi-way Cable Assemblies



RF Cable Assemblies



Breakouts



Connector Blocks

We also offer customized cabling and have a free online **Cable Design Tool** that can be used to create custom cable solutions for many applications.

- Fully supported on modern browsers and tablet operating systems.
- Built-in tutorials and videos allow you to get quickly up to speed.
- Store cable assemblies in the Cloud and develop over time.
- Each cable design has a downloadable PDF documentation file detailing all specifications

Start designing your custom cabling, go to pickeringtest.com/cdt

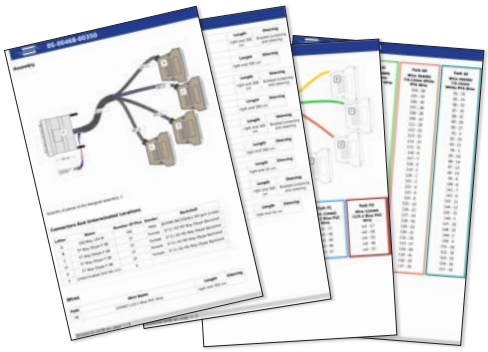

Mass Interconnect

We recommend the use of a mass interconnect solution when an Interchangeable Test Adapter (ITA) is required for PXI/LXI based test systems. Our modules are fully supported by Virginia Panel and MacPanel.

Pickering Reed Relays

We are the only switch provider with in-house reed relay manufacturing capability via our Relay Division. These instrument grade reed relays feature ***SoftCenter***™ technology, ensuring long service life and repeatable contact performance.

To learn more go to pickeringrelay.com

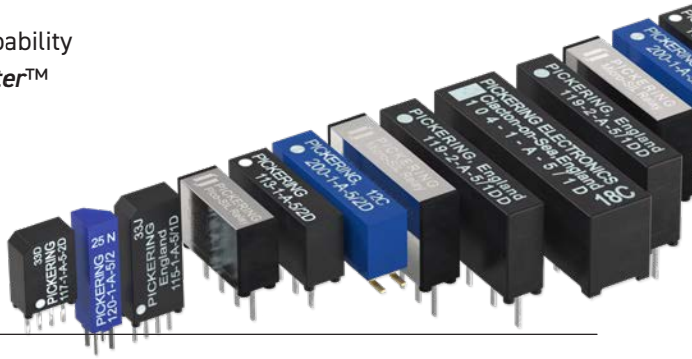

Programming

Pickering provide kernel, IVI and VISA (NI & Keysight) drivers which are compatible with all Microsoft supported versions of Windows and popular older versions.

For more information go to pickeringtest.com/os

The VISA driver support is provided for LabVIEW Real Time Operating Systems (Pharlap and Linux-RT). For other RTOS support contact Pickering. These drivers may be used with a variety of programming environments and applications including:

- **Pickering Interfaces Switch Path Manager**
- **National Instruments** products (LabVIEW, LabWindows/CVI, Switch Executive, MAX, TestStand, VeriStand, etc.)
- **Microsoft Visual Studio** products (Visual Basic, Visual C++)
- **Programming Languages** C, C++, C#, Python
- **Keysight** VEE and OpenTAP
- **Mathworks MATLAB, Simulink**
- **Marvin** ATEasy
- **MTQ Testsolutions** Tecap Test & Measurement Suite

Drivers for popular Linux distributions are available, other environments are also supported, please contact Pickering with specific enquiries. We provide Soft Front Panels (SFPs) for our products for familiarity and manual control, as well as comprehensive documentation and example programs to help you develop test routines with ease.

To learn more about software drivers and development environments go to pickeringtest.com/software

Signal Routing Software

Our signal routing software, Switch Path Manager, automatically selects and energizes switch paths through Pickering switching systems. Signal routing is performed by simply defining test system endpoints to be connected together, greatly accelerating Test System software development.

To learn more go to pickeringtest.com/spm

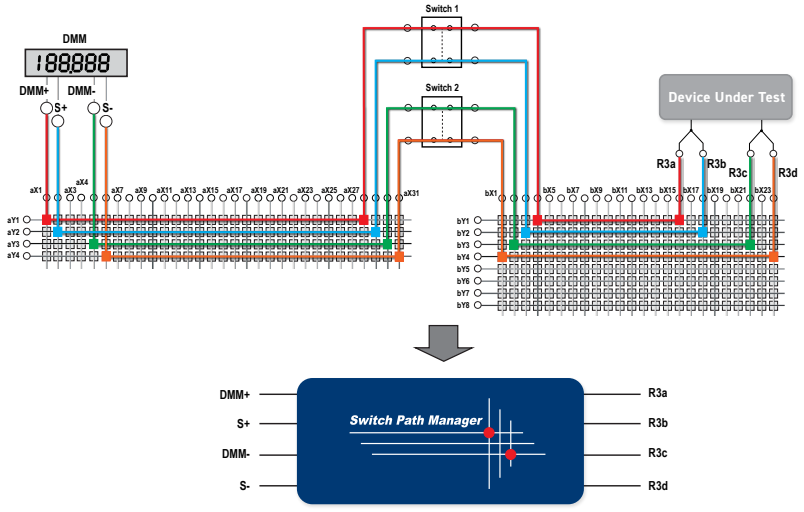

Diagnostic Relay Test Tools

eBIRST Switching System Test Tools are designed specifically for our PXI, PCI or LXI products, these tools simplify switching system fault-finding by quickly testing the system and graphically identifying the faulty relay.

To learn more go to pickeringtest.com/ebirst



Three Year Warranty & Guaranteed Long-Term Support

All standard products manufactured by Pickering Interfaces are warranted against defective materials and workmanship for three years from the date of delivery to the original purchaser. Extended warranty and service agreements are available with various levels for your requirements. Although we offer a 3-year warranty as standard, we also include guaranteed long-term support—with a history of supporting our products for typically 15-20 years.

To learn more go to pickeringtest.com/support

Available Product Resources

We have a library of resources including success stories, product and support videos, articles and white papers as well as application-specific brochures to assist you. We have also published reference books on switching technology and the PXI and LXI standards.

To view, download or request any of our product resources go to pickeringtest.com/resources



© Copyright (2025) Pickering Interfaces. All Rights Reserved
Pickering Interfaces maintains a commitment to continuous product development, consequently we reserve the right to vary from the description given in this data sheet.