CONTACT THAILAND DISTRIBUTOR - TECHSQUARE CO., LTD.
TEL +666-5559-6050 EMAIL sales@techsquare.co.th SITE www.techsquare.co.th

PXI/PXIe Multi-Channel 5 A Battery Simulator 41/43-754

PRELIMINARY DATA

- Available as PXI or PXIe Modules
- 4 or 2 Power Supplies In A Single Slot
- Voltage & Current Readback
- Independent Sense Connections
- Ideal For Battery Stack Emulation
- 1000 V / 750 V Independent Isolation Barriers
- Up to 5 A Output Per Simulator
- Battery Charging Emulation up to 7 W Continuous, Higher Wattage Possible With Some Duty Cycle (TBC)
- Uses External Power Sources (48 V DC)
- Hardware Shutdown Control
- Drivers Supplied for Windows & Linux, Plus Support for Real-time Systems

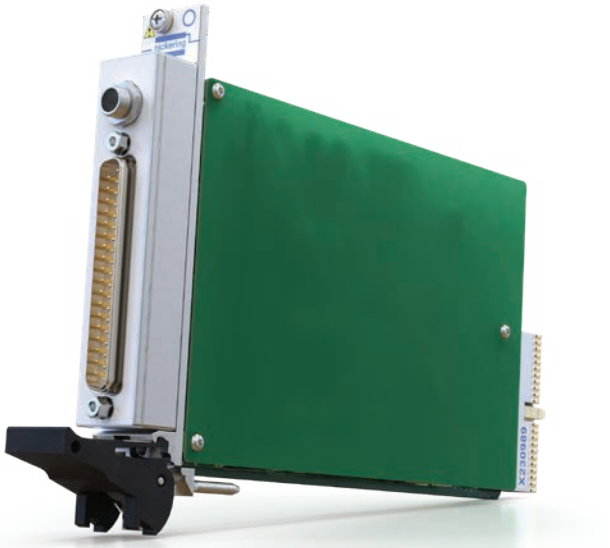

The 41-754 (PXI) and 43-754 (PXIe) are 2 or 4 channel battery simulators, capable of supplying up to 8 V and 5 A per channel. The channels are fully isolated from ground and from each other allowing series connection to simulate batteries in a stacked architecture. The isolation barrier (1000 V channel to GND and 750 V channel to channel) allows the module to be used as a battery stack representative of those used for vehicle propulsion.

An equally important function of each channel is the ability to simulate a battery under charge. Each channel can sink up to 7 W with the ability to handle higher wattage/surges with some duty cycle (TBC), which is programmed by setting a charging current limit.

Each channel provides independent power and sense connections, allowing the simulator to sense a remote load and correct for wiring losses. The battery simulator is designed to respond to dynamic loads, minimizing the need for local decoupling capacitors at the load. The module also has the ability to independently read the voltage at the load (via sense lines) and current for each channel.

A control line on the user connector allows the user to shutdown all battery simulator channels with one signal. Multiple control lines may be linked together to provide an easy way of inhibiting the output when using many series connected modules. This also provides a means of automatic shutdown when connectors are removed.

Utilising calibration data and I/V readback, each channel can automatically adjust the output voltage of the module through a feedback system, allowing greater output accuracy.

The 41/43-754 can be used as a 4 channel fully isolated power supply with independent sense lines on each channel.

The user connector is a 37-pin high voltage D-type which is fully supported by our wide range of connector accessories.

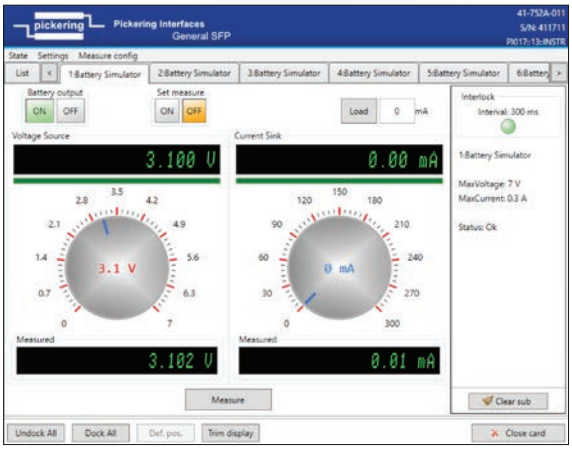

Soft Front Panel for Battery Simulator Modules

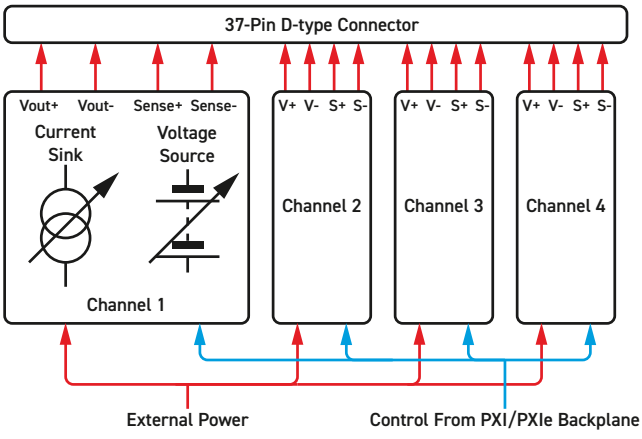

4-Channel Battery Simulator - Part No. 41/43-754-011

Issue F September 2025

PRELIMINARY DATA

Specification

Number of Channels:	4 or 2 independent isolated channels.
Output Voltage Range:	From 1 V to 8 V, settable with 10 mV resolution.
Output Voltage Accuracy:	±0.1 %, ±10 mV from 1 V to 8 V, Over ambient temperature range +11 °C to +31 °C.
Isolation Voltage:	±1000 V channel to GND ±750 V channel to channel
Output Current:	Up to 5 A per channel for voltages from 1 V to 8 V*
Current Sink:	7 W* of continuous operation** 40 W absolute surge (but observe 30 V*** absolute maximum voltage at the output)
Output Connections:	Vout+, Vout- and two sense inputs for each simulator channel. Sense inputs detect output voltage at front panel connector if no remote sense lines are connected.
Current Readback:	Resolution: 1 mA Accuracy: ±0.2 %
Voltage Readback:	Resolution: 1 mV Accuracy: ±0.2 %
Load Response Time:	TBC
Channel Power Source:	External 48 V

* Total module loads should be considered in conjunction with chassis cooling ability.

** Higher wattage for current sink is possible with duty cycle/derating. This is dependent on setup, atmospheric conditions, chassis cooling, module density in the chassis and frequency of operation. For further information, please see sink derating curve in the manual (TBC).

*** The module is not designed for permanent sink overloading - the temperature cutout is for protection, not a work load feature.

PXI Power Requirements - 41-754

+3.3 V	+5 V	+12 V	-12 V
TBC	TBC	TBC	TBC

PXIe Power Requirements - 43-754

+3.3 V	+12 V
TBC	TBC

At maximum load for all channels.

Power Requirements - External PSU

48 VDC, 2 A, 90 W (TBC) - via front panel power connector.

Recommended Chassis

For PXI versions, the recommended chassis are 60-103 and 60-103A or 40-923 and 40-923A for applications requiring maximum moudule current handling, also, many modules (up to 18 off) in a single chassis, to avoid chassis limitations.
For PXIe versions the recommended chassis are the 42-924 (8-slot) and 42-925 (18-slot).

Mechanical Characteristics

41-754 - Single slot 3 U PXI (CompactPCI card).
43-754 - Single slot 3 U PXIe, compatible with PXIe hybrid slot.
3D models for all versions in a variety of popular file formats are available on request.

Connectors

41-754 - PXI bus via 32-bit P1/J1 backplane connector.
43-754 - PXIe bus via XJ3 and XJ4 backplane connectors.
Signals via front panel 37-pin male high voltage D-type connector, for pin outs please refer to the operating manual.

PRELIMINARY DATA

PXI & CompactPCI Compliance - 41-754

The module is compliant with the PXI Specification 2.2.
Local Bus, Trigger Bus & Star Trigger are not implemented.
Uses a 33 MHz 32-bit backplane interface.

PXIe Compliance - 43-754

The module is compliant with the PXIe Specification 1.0.
Local Bus, Trigger Bus & Star Trigger are not implemented.

Safety & CE Compliance

All modules are fully CE compliant and meet applicable EU directives: Low-voltage safety EN61010-1:2010, EMC Immunity EN61326-1:2013, Emissions EN55011:2009+A1:2010.

Operating/Storage Conditions

Operating Temperature:	0 °C to +55 °C
Humidity:	Up to 90 % non-condensing
Altitude:	5000 m
Storage Temperature:	-20 °C to +75 °C
Humidity:	Up to 90 % non-condensing
Altitude:	15000 m

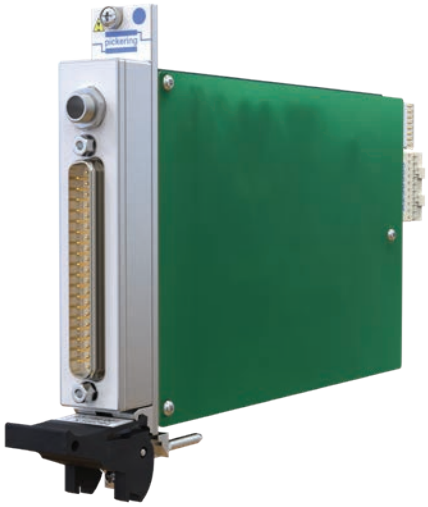

43-754-011 4-Channel 5 A Battery Simulator Module in PXIe Format

Product Order Codes

PXI 5 A Battery Simulator With I/V Readback	
4-Channel	41-754-011
2-Channel	41-754-012
PXIe 5 A Battery Simulator With I/V Readback	
4-Channel	43-754-011
2-Channel	43-754-012

Product Customization

Pickering modules are designed and manufactured on our own flexible manufacturing lines, giving complete product control and enabling simple customization to meet very specific requirements.

All customized products are given a unique part number, fully documented and may be ordered at any time in the future. Please contact your local sales office to discuss.

Support Products

Mating Connectors & Cabling

For connection accessories for the 41/43-754 modules please refer to the 90-007HVD 37-pin High Voltage D-type Connector data sheet where a complete list and documentation can be found for accessories.



Pickering can supply mating connectors and cable assemblies to enable easy integration of the 41/43-754 battery simulator modules

PRELIMINARY DATA

Chassis Compatibility

The PXI versions of this module are compatible with the following chassis types:

- All chassis conforming to the 3U PXI and 3U Compact PCI (cPCI) specification
- Legacy and Hybrid Peripheral slots in a 3U PXI Express (PXIe) chassis
- Pickering Interfaces LXI or LXI/USB Modular Chassis

The PXIe versions of this module are compatible with the following chassis types:

- All chassis conforming to the 3U PXIe specification
- PXIe and Hybrid Peripheral slots in a 3U PXI Express (PXIe) chassis

Chassis Selection Guide

PXI and PXIe (with PXIe and/or Hybrid slots) Chassis from any Vendor:

- Mix our 1000+ PXI/PXIe switching & simulation modules with any vendor's PXI/PXIe instrumentation
- Embedded or remote Windows PC control
- Real-time Operating System Support
- High data bandwidths, especially with PXI Express
- Integrated module timing and synchronization



Pickering LXI or LXI/USB Modular Chassis Only accept our PXI Switching & Simulation Modules:

- Choose from 1000+ Pickering PXI Modules
- Ethernet or USB control enables remote operation
- Low-cost control from practically any controller
- LXI provides manual control via Web browsers
- Driverless software support
- Power sequencing immunity
- Ethernet provides chassis/controller voltage isolation
- Independence from Windows operating system



PRELIMINARY DATA

Connectivity Solutions

We provide a full range of supporting cable and connector solutions for all our switching products—20 connector families with **1200+** products. We offer everything from simple mating connectors to complex cables assemblies and terminal blocks. All assemblies are manufactured by Pickering and are guaranteed to mechanically and electrically mate to our modules. These accessories are detailed in Connector Accessories data sheets, where a complete list and documentation can be found for each accessory.



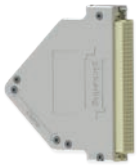

Connectors & Backshells



Multi-way Cable Assemblies



RF Cable Assemblies



Breakouts



Connector Blocks

We also offer customized cabling and have a free online **Cable Design Tool** that can be used to create custom cable solutions for many applications.

- Fully supported on modern browsers and tablet operating systems.
- Built-in tutorials and videos allow you to get quickly up to speed.
- Store cable assemblies in the Cloud and develop over time.
- Each cable design has a downloadable PDF documentation file detailing all specifications

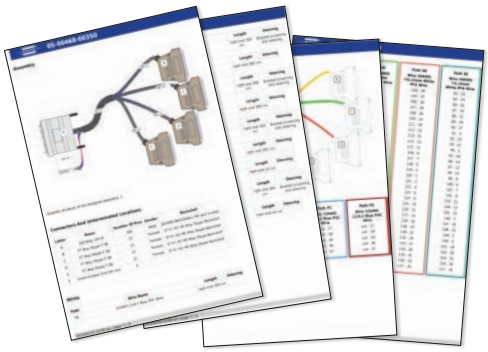

Start designing your custom cabling, go to pickeringtest.com/cdt

Mass Interconnect

We recommend the use of a mass interconnect solution when an Interchangeable Test Adapter (ITA) is required for PXI/LXI based test systems. Our modules are fully supported by Virginia Panel and MacPanel.

Pickering Reed Relays

We are the only switch provider with in-house reed relay manufacturing capability via our Relay Division. These instrument grade reed relays feature ***SoftCenter***™ technology, ensuring long service life and repeatable contact performance.

To learn more go to pickeringrelay.com

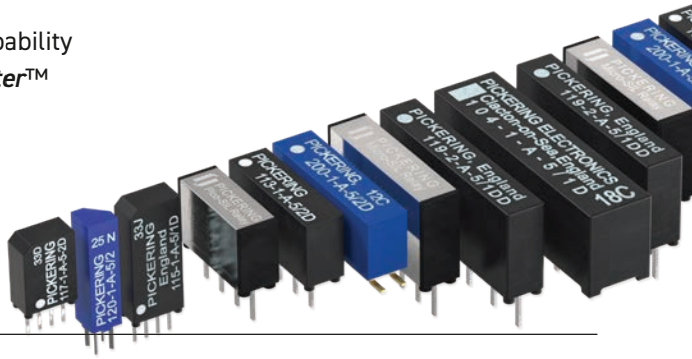

PRELIMINARY DATA

Programming

Pickering provide kernel, IVI and VISA (NI & Keysight) drivers which are compatible with all Microsoft supported versions of Windows and popular older versions.

For more information go to pickeringtest.com/os

The VISA driver support is provided for LabVIEW Real Time Operating Systems (Pharlap and Linux-RT). For other RTOS support contact Pickering. These drivers may be used with a variety of programming environments and applications including:

- **Pickering Interfaces Switch Path Manager**
- **National Instruments** products (LabVIEW, LabWindows/CVI, Switch Executive, MAX, TestStand, VeriStand, etc.)
- **Microsoft Visual Studio** products (Visual Basic, Visual C++)
- **Programming Languages** C, C++, C#, Python
- **Keysight** VEE and OpenTAP
- **Mathworks MATLAB, Simulink**
- **Marvin** ATEasy
- **MTQ Testsolutions** Tecap Test & Measurement Suite

Drivers for popular Linux distributions are available, other environments are also supported, please contact Pickering with specific enquiries. We provide Soft Front Panels (SFPs) for our products for familiarity and manual control, as well as comprehensive documentation and example programs to help you develop test routines with ease.

To learn more about software drivers and development environments go to pickeringtest.com/software

Signal Routing Software

Our signal routing software, Switch Path Manager, automatically selects and energizes switch paths through Pickering switching systems. Signal routing is performed by simply defining test system endpoints to be connected together, greatly accelerating Test System software development.

To learn more go to pickeringtest.com/spm

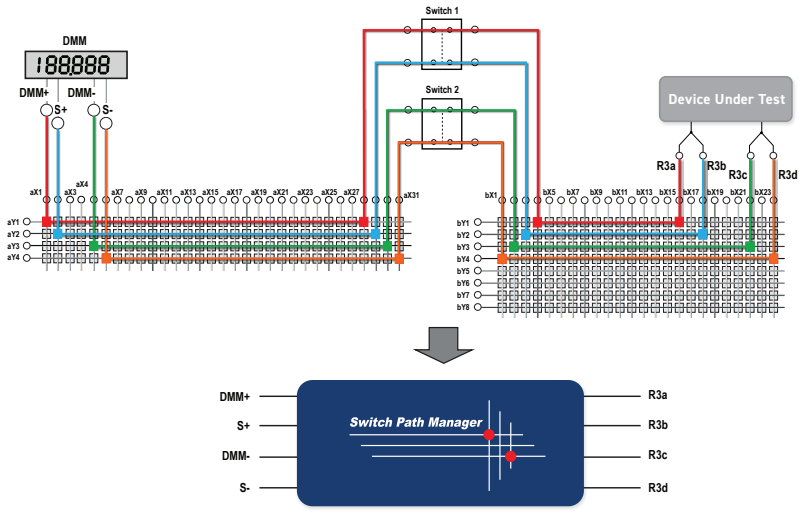

PRELIMINARY DATA

Diagnostic Relay Test Tools

eBIRST Switching System Test Tools are designed specifically for our PXI, PCI or LXI products, these tools simplify switching system fault-finding by quickly testing the system and graphically identifying the faulty relay.

To learn more go to pickeringtest.com/ebirst



Three Year Warranty & Guaranteed Long-Term Support

All standard products manufactured by Pickering Interfaces are warranted against defective materials and workmanship for three years from the date of delivery to the original purchaser. Extended warranty and service agreements are available with various levels for your requirements. Although we offer a 3-year warranty as standard, we also include guaranteed long-term support—with a history of supporting our products for typically 15-20 years.

To learn more go to pickeringtest.com/support

Available Product Resources

We have a library of resources including success stories, product and support videos, articles and white papers as well as application-specific brochures to assist you. We have also published reference books on switching technology and the PXI and LXI standards.

To view, download or request any of our product resources go to pickeringtest.com/resources



© Copyright (2025) Pickering Interfaces. All Rights Reserved.
Pickering Interfaces maintains a commitment to continuous product development, consequently we reserve the right to vary from the description given in this data sheet.