PXI Millivolt Thermocouple Simulator 41-760

- 32, 24, 16 or 8 Channel Low Voltage Source
- Ideal For Thermocouple Simulation
- +/-100 mV, +/-50 mV and +/-20 mV Output Ranges
- 0.7 µV Voltage Resolution (+/-20 mV Range)
- Two-Wire Output for Each Channel
- Remote Sense for Breaking Ground Loop Effects
- Open Circuit Simulation
- Supported in PXI or LXI Chassis
- Kernel and VISA Drivers
- 3 Year Warranty



The 41-760 is a low voltage source module ideal for simulating the operation of a thermocouple, available with a choice of 32, 24, 16 or 8 channels. Each channel of the 41-760 provides a low voltage output across two connector pins capable of providing ±20 mV with 0.7 µV resolution, ±50 mV with 1.7 µV resolution and ±100 mV with 3.3 µV resolution, covering most thermocouple types.

The use of two wire outputs ensures that the 41-760 can be used to accurately simulate low voltages even in the presence of common mode voltages in the system. Each Vcold connection is independent permitting the 41-760 to be connected to multiple cold junctions.

Each simulation channel is able to provide an open circuit setting to simulate faulty wiring connections to a sensor.

For improved accuracy each channel of the Low Voltage Source carries accurate calibration data stored in EEPROM on the module. Regular calibration of the channels is not necessary.

When used for Thermocouple Simulation the 41-760 can be connected straight into the measurement system, bypassing the need for Isothermal Blocks and Cold Junction Compensation. To aid in this, Pickering offers a 78-pin connector solution that has 32, 24, 16 or 8 copper twisted pairs terminated with mini copper thermocouple plugs. Use of copper connections minimizes offset voltage generation in the connection interface.

Alternatively Pickering can also supply connector blocks that convert the copper connections of the module's 78-pin connector to that of the required thermocouple type.

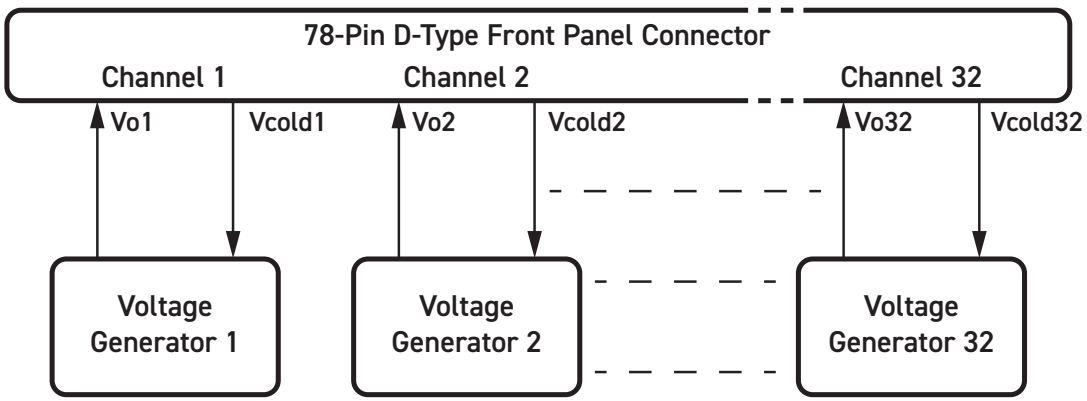

Functional Diagram for the 41-760-001 Millivolt Thermocouple Simulator Module

ISSUE 4.0 MAR 2021

Specification

Low Voltage Channels:	
Number of Channels:	32, 24, 16 or 8
Output Voltage Range:	±20 mV, ±50 mV and ±100 mV ranges (Vo to Vcold).
Voltage Resolution:	0.7 µV nominal (±20 mV range), 1.7 µV nominal (±50 mV range), 3.3 µV nominal (±100 mV range).
Common Mode Output:	Up to 1 V common mode peak output voltage, better than 80dB common mode output rejection ratio.
Output Resistance:	50 Ω nominal - remote switch closed 10 kΩ nominal - remote switch open
Accuracy* (Measuring Condition: High-Z Instrument):	0.1 % ±5 µV (±20 mV range), 0.1 % ±10 µV (±50 mV range), 0.1 % ±15 µV (±100 mV range).
* Valid at ±10°C from calibration temperature (factory calibrated at 21 °C).	
Power Off State:	Open circuit
Software support:	
Supplied with software that responds to a voltage instruction on the selected channel.	

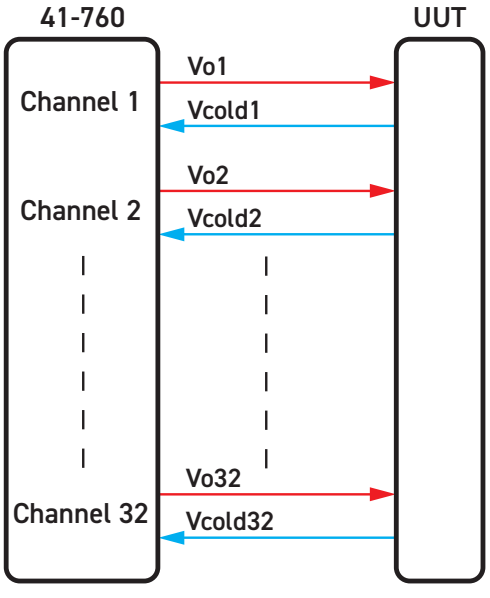

Using 41-760-001 directly connected to UUT for Thermocouple Simulation

Power Requirements

+3.3 V	+5 V	+12 V	-12 V
250 mA	100 mA	200 mA	200 mA

Mechanical Characteristics

Single slot 3U PXI (CompactPCI card).
3D models for all versions in a variety of popular file formats are available on request.

Connectors

PCI Interface: 33 MHz, 32-bit address, 16-bit data Interface is compatible with PXI, PXI Express Legacy and PXI Express Hybrid slots.

Signals via front panel 78-pin male D-type connector, for pin outs please refer to the operating manual.

Operating/Storage Conditions

Operating Conditions

Operating Temperature:	0 °C to +55 °C
Humidity:	Up to 90 % non-condensing
Altitude:	5000 m

Storage and Transport Conditions

Storage Temperature:	-20 °C to +75 °C
Humidity:	Up to 90 % non-condensing
Altitude:	15000 m

PXI & CompactPCI Compliance

The module is compliant with the PXI Specification 2.2. Local Bus, Trigger Bus & Star Trigger are not implemented.

Uses a 33 MHz 32-bit backplane interface.

Safety & CE Compliance

All modules are fully CE compliant and meet applicable EU directives: Low-voltage safety EN61010-1:2010, EMC Immunity EN61326-1:2013, Emissions EN55011:2009+A1:2010.*

Product Order Codes

Thermocouple Simulator, 32 Channel	41-760-001
Thermocouple Simulator, 24 Channel	41-760-002
Thermocouple Simulator, 16 Channel	41-760-003
Thermocouple Simulator, 8 Channel	41-760-004
Accessories	
Compensation Block	40-965-912

Product Customization

Pickering modules are designed and manufactured on our own flexible manufacturing lines, giving complete product control and enabling simple customization to meet very specific requirements.

All customized products are given a unique part number, fully documented and may be ordered at any time in the future. Please contact your local sales office to discuss.

Pickering Interfaces is dedicated to developing its Millivolt Thermocouple Simulation range. If there are any sensor types or features that are not currently available, please contact your local sales office with details.

Mating Connectors & Cabling

For connecting the Thermocouple Simulator module to the device under test we recommend the following cables:

78-pin D-type to 32 mini copper thermocouple plugs, 1m length* **A078DFR-32M002T5A100**

78-pin D-type to 24 mini copper thermocouple plugs, 1m length* **A078DFR-24M002T5A100**

78-pin D-type to 16 mini copper thermocouple plugs, 1m length* **A078DFR-16M002T5A100**

78-pin D-type to 8 mini copper thermocouple plugs, 1m length* **A078DFR-08M002T5A100**

*Other lengths are available.

Other 78-pin cable/connector products are available but may reduce the performance of the product.

For applications requiring specific thermocouple wiring and connector types. please contact your local Pickering Sales Office.

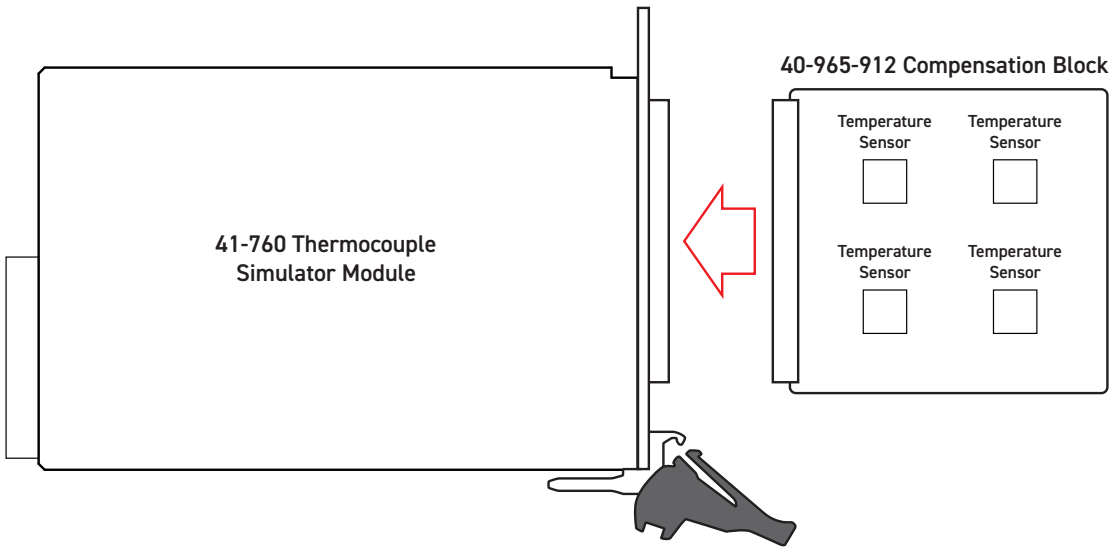

The Compensation Block accessory (40-965-912) gives the user a temperature for the junction between the copper based system of the module / cabling and the Thermocouple material based cabling of the test system, allowing compensation of readings to increase accuracy.

Chassis Compatibility

This PXI module must be used in a suitable chassis. It is compatible with the following chassis types:

- All chassis conforming to the 3U PXI and 3U Compact PCI (cPCI) specification
- Legacy and Hybrid Peripheral slots in a 3U PXI Express (PXIe) chassis
- Pickering Interfaces LXI or LXI/USB Modular Chassis

Chassis Selection Guide

Standard PXI or hybrid PXIe Chassis from any Vendor:

- Mix our 1000+ PXI switching & simulation modules with any vendor's PXI instrumentation
- Embedded or remote Windows PC control
- Real-time Operating System Support
- High data bandwidths, especially with PXI Express
- Integrated module timing and synchronization



Pickering LXI or LXI/USB Modular Chassis—only accept our 1000+ PXI Switching & Simulation Modules:

- Ethernet or USB control enables remote operation
- Low-cost control from practically any controller
- LXI provides manual control via Web browsers
- Driverless software support
- Power sequencing immunity
- Ethernet provides chassis/controller voltage isolation
- Independence from Windows operating system



Connectivity Solutions

We provide a full range of supporting cable and connector solutions for all our switching products—20 connector families with 1200+ products. We offer everything from simple mating connectors to complex cables assemblies and terminal blocks. All assemblies are manufactured by Pickering and are guaranteed to mechanically and electrically mate to our modules.



Connectors & Backshells



Multiway Cable Assemblies

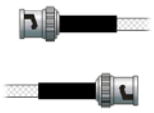

RF Cable Assemblies



Connector Blocks

We also offer customized cabling and have a free online **Cable Design Tool** that can be used to create custom cable solutions for many applications. Visit: pickeringtest.com/cdt to start your design.



Mass Interconnect

We recommend the use of a mass interconnect solution when an Interchangeable Test Adapter (ITA) is required for a PXI or LXI based test system. Our modules are fully supported by both Virginia Panel and MacPanel.

Pickering Reed Relays

We are the only switch provider with in-house reed relay manufacturing capability via our Relay Division. These instrument grade reed relays feature ***SoftCenter™*** technology, ensuring long service life and repeatable contact performance. To learn more, please go to: pickeringrelay.com



Programming

Pickering provide kernel, IVI and VISA (NI & Keysight) drivers which are compatible with all Microsoft supported versions of Windows and popular older versions. For a list of all supporting operating systems, please see: pickeringtest.com/os

The VISA driver is also compatible with Real-Time Operating Systems such as LabVIEW RT. For other RTOS support contact Pickering. These drivers may be used with a variety of programming environments and applications including:

- **Pickering Interfaces Switch Path Manager**
- **National Instruments** products (LabVIEW, LabWindows/CVI, Switch Executive, MAX, TestStand, VeriStand, etc.)
- **Microsoft Visual Studio** products (Visual Basic, Visual C+)
- **Keysight** VEE and OpenTAP
- **Mathworks** Matlab
- **Marvin** ATEasy
- **MTQ Testsolutions** Tecap Test & Measurement Suite

Drivers for popular Linux distributions are available, other environments are also supported, please contact Pickering with specific enquiries. We provide Soft Front Panels (SFPs) for our products for familiarity and manual control, as well as comprehensive documentation and example programs to help you develop test routines with ease.
To learn more about software drivers and development environments, please go to: pickeringtest.com/software

Signal Routing Software



Our signal routing software, Switch Path Manager, automatically selects and energizes switch paths through Pickering switching systems. Signal routing is performed by simply defining test system endpoints to be connected together, greatly accelerating Test System software development. To learn more, please go to: pickeringtest.com/spm

Diagnostic Relay Test Tools



eBIRST Switching System Test Tools are designed specifically for our PXI, PCI or LXI products, these tools simplify switching system fault-finding by quickly testing the system and graphically identifying the faulty relay.
To learn more, please go to: pickeringtest.com/ebirst

Three Year Warranty & Guaranteed Long-Term Support

All standard products manufactured by Pickering Interfaces are warranted against defective materials and workmanship for a period of three years from the date of delivery to the original purchaser. Extended warranty and service agreements are available for all our modules and systems with various levels to suit your requirements. Although we offer a 3-year warranty as standard, we also include guaranteed long-term support—with a history of supporting our products for typically 15-20 years. To learn more, please go to: pickeringtest.com/support

Available Product Resources

We have a large library of product resources including success stories, product and support videos, articles and white papers as well as application specific product brochures to assist when looking for the switching, simulation and connection solutions you need. We have also published handy reference books on Switching Technology and for the PXI and LXI standards.

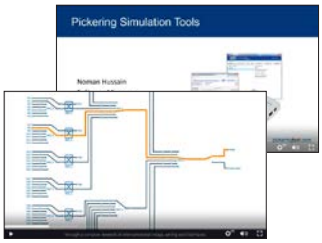







To view, download or request any of our product resources, please visit: pickeringtest.com/resources

© Copyright (2021) Pickering Interfaces. All Rights Reserved
Pickering Interfaces maintains a commitment to continuous product development, consequently we reserve the right to vary from the description given in this data sheet.